RA120 SERIES

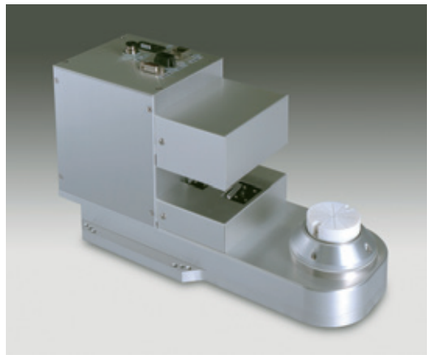

Image: RA120

The non-contact optical detection method detects the center and notch position of the wafer on the spindle. Centering and notch orientation are performed on the robot finger using this aligner and robot.

Features

- The wafer alignment operation is performed together with the robot arm operation.
- Compact structure with the spindle axis only.
- RORZE original infrared sensor for wafer detection.

Cautions on operation

This aligner must be used together with the arm type robot.
Consult our inquiry office separately for the control software such as the communication specifications of the robot and aligner.

Main specifications

Model	RA120-C01
Wafer to be handled	300 mm (in compliance with SEMI M 1.9 and SEMI M 1.10)
Communication method	TCP/IP
Common power	24V DC ± 10%, 3A

Outline dimensions

■ RA120-C01

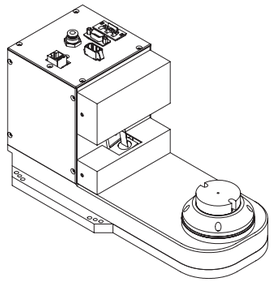

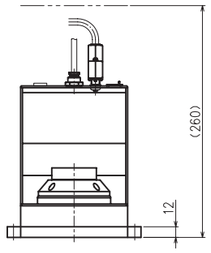

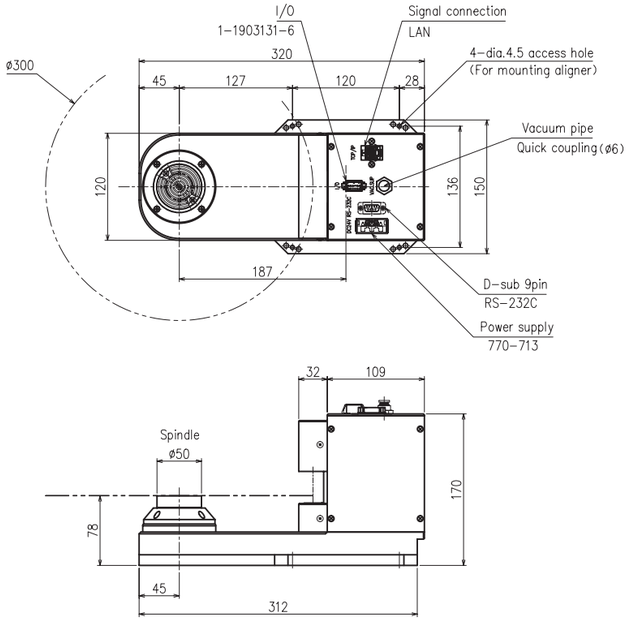

RA320 SERIES

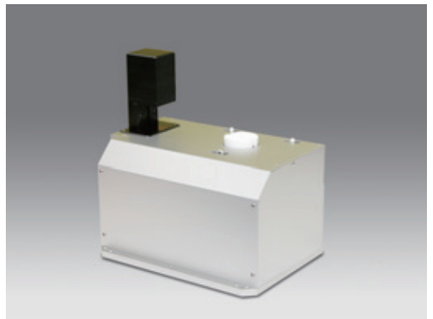

Photo: RA320-C22-L101

The aligner (RA320 SERIES) has the Z-axis and X-axis mechanisms for compensating the wafer position inaddition to the θ axis. This is a small and lightweight type to reduce the installation footprint. Various kinds of wafer alignment operations are available according to the type of non-contact optical sensors.

Features

- Handling of transparent objects (glass), laminate, and notch-less wafers (L type)
- Small type and lightweight
- Small footprint

Main specifications

Wafer size	Positioning accuracy		Positioning interval Note 1
	Angle accuracy Note 1	Center accuracy	
ϕ 100 mm to ϕ 300 mm	± 0.05° to ± 0.2°	± 0.1mm	Average 5 sec

Note 1: This is the processing time interval of standard accuracy, and changes according to the kind of sensor, wafer size, and required accuracy.

Outline dimensions

■ RA320-C22-L

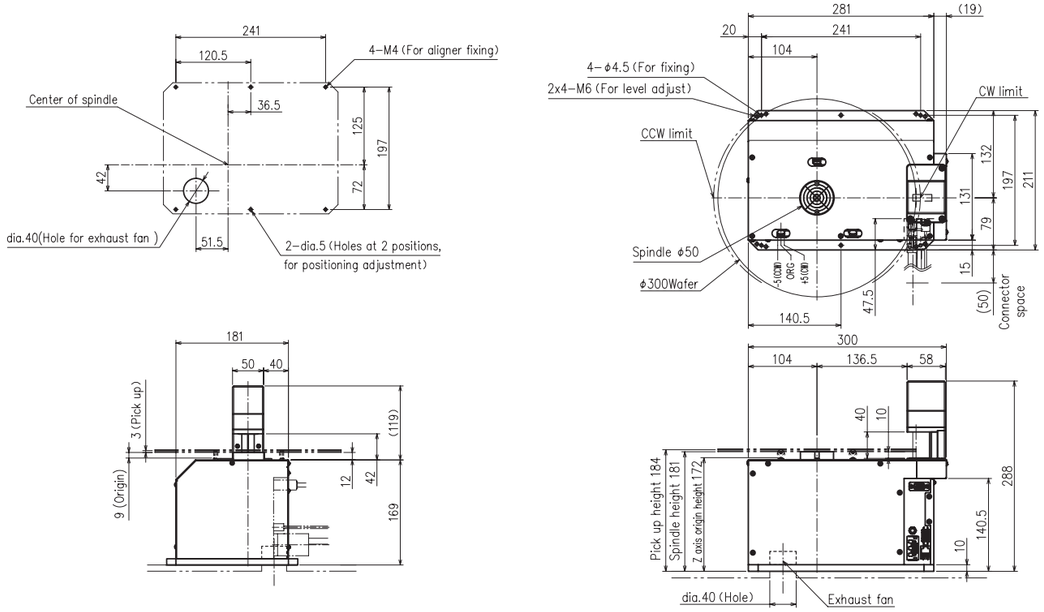

■ RA320-822-L

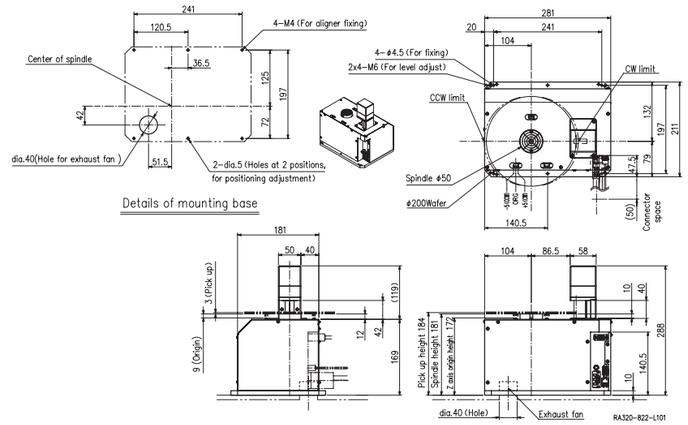

■ RA320-822-W

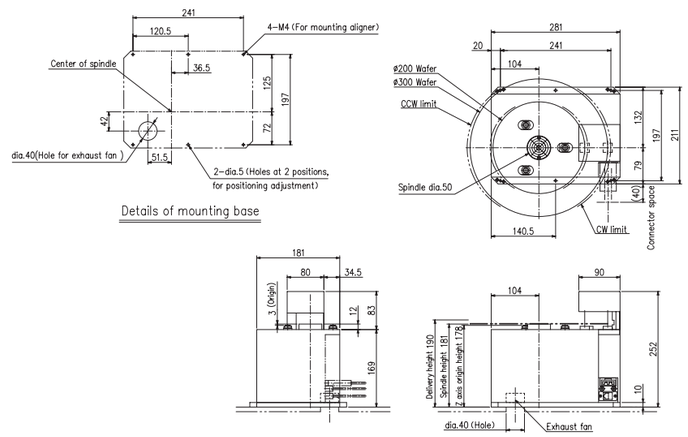

■ RA320-622-L

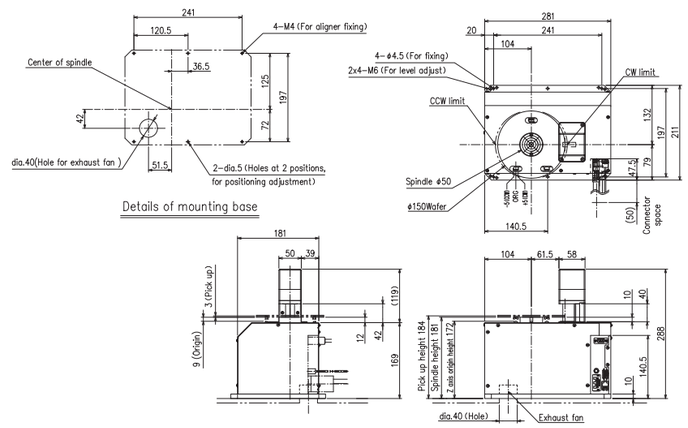

RA321 SERIES

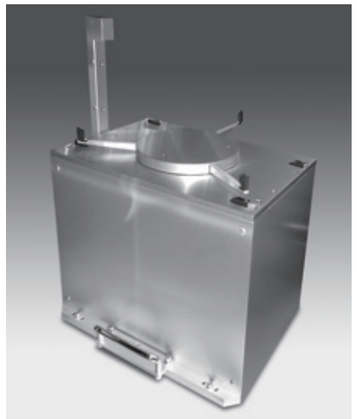

Photo: RA321

The aligner (RA321 SERIES) is the edge clamp type aligner which has the clamp axis, θ-axis, and Z-axis. The edge clamp method, which clamps the outer periphery of the wafer, minimizes the particle generation.

Features

- High speed and high accuracy
- Throughput of the system is improved (with buffer).
- Handling of transparent objects (glass) and laminate wafers
  Notch-less wafers can be handled using the image sensor.

Main specifications

Processing object	Positioning accuracy		Positioning interval
	Angle accuracy	Center accuracy	
ϕ 200 mm	± 0.2°	± 0.1mm	Approximately 4 sec Note 1
ϕ 300 mm			

Note1: For 300 mm wafers

Outline dimensions

■ RA321-C0C-BW

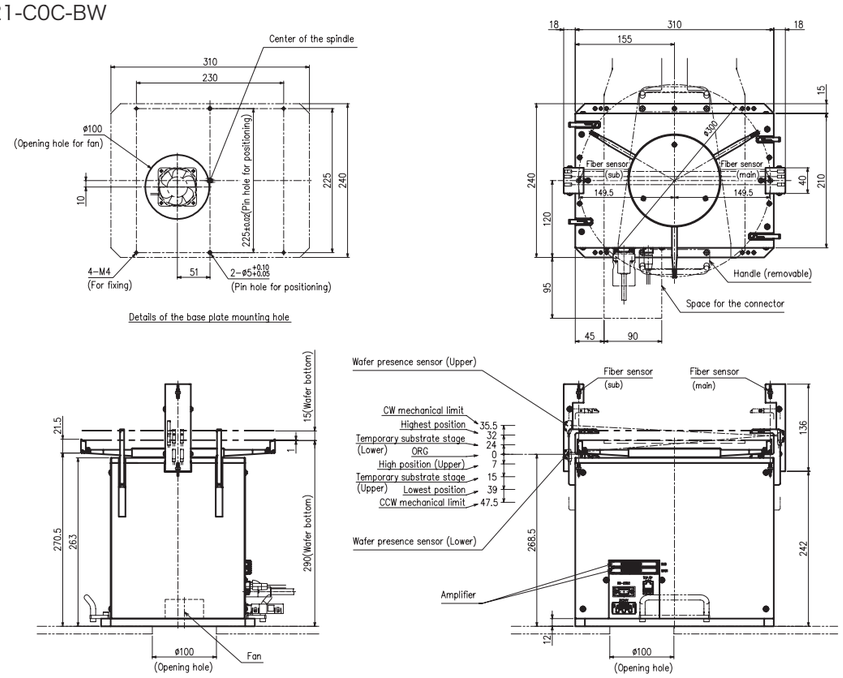

■ RA321-80C-TW002

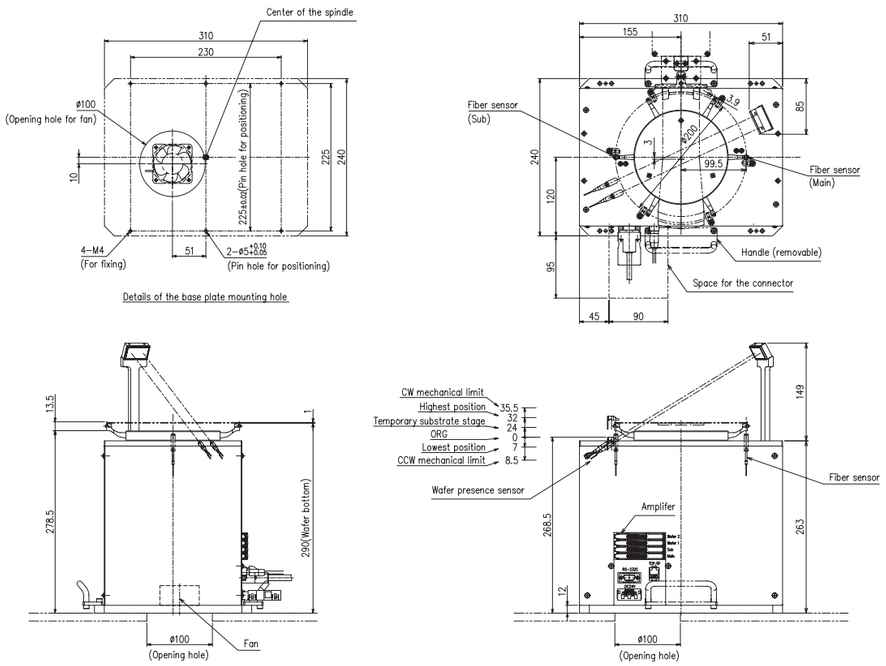

RA420L SERIES

Photo: RA420-48V-L

This is the high-accuracy aligner with the X-axis,Y-axis and θ-axis, and has the Z-axis mechanism for compensating the wafer position.

Features

- Throughput is improved.
- Handling of transparent glass works and laminate wafers

Main specifications

Wafer size	Positioning accuracy		Positioning interval Note 1
	Notch angle accuracy Note 1	Center accuracy Note 1	
ϕ 100 mm to ϕ 300 mm	± 0.05° to ± 0.2°	± 0.05 to ±0.1 mm	2 sec to 6 sec

Note 1: Changes according to the kind of the sensor and wafer size.

Outside dimensions

■ RA420-48V-L

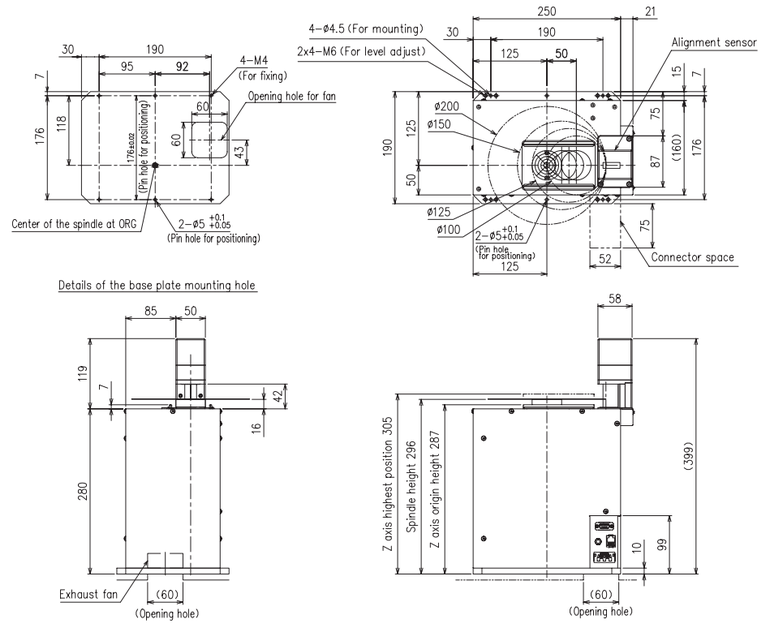
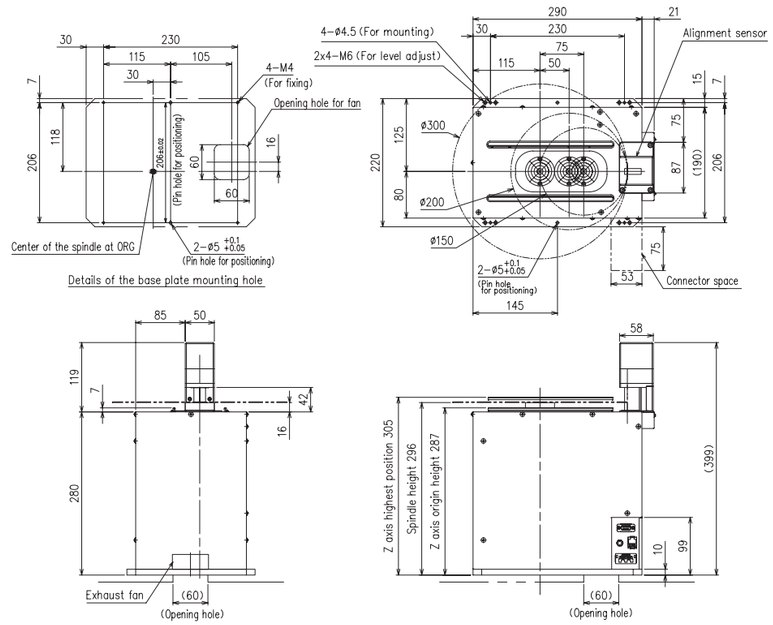
■ RA420-6CV-L